Subminiature Pushbutton Switches

Specifications:

Contact rating:	250 V AC, 1 A / 120 V AC, 3 A / 28 V DC, 3 A
Contact resistance:	< 50 mΩ
Insulation resistance:	> 1000 MΩ
Dielectric strength:	1000 V, 50 Hz for the duration of 1 minute
Operating temperature:	– 30° to + 85° C
Mechanical life:	minimum 50 000 operations
Contacts:	brass, silver-plated
Terminals:	brass, silver-plated
Case:	base: PA, cover: stainless steel, actuator: PA
Mounting:	single-hole
Timing:	non-shorting
Soldering conditions:	auto-soldering – max. 10 sec, max. 260 °C (pre-heat max. 120 s, max 150 °C) manual soldering – max. 5 sec, max 350 °C

Models: Switching functions

MZP 1 D on – on

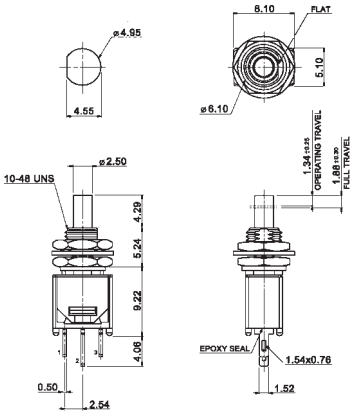

Packing: 100 pcs/bag

knitter-switch

Distributor: Sider Electronic Industries Ltd.
Tel: 852-23892522 Fax: 852-23574546
Email: info@sider.com.hk URL: www.sider.com.hk