Distributor: Sider Electronic Industries Ltd.
Tel: 852-23892522 Fax: 852-23574546
Email: info@sider.com.hk URL: www.sider.com.hk

18 mm Square Encoders (High Rotational Torque)

Type: **EVQW**

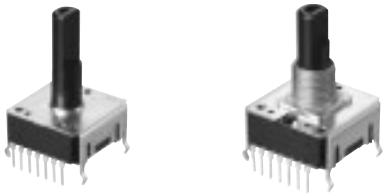

■ Features

- External dimensions : 18.0 mm×18.0 mm, Height 8.0 mm
- Absolute 5 bit available

■ Recommended Applications

- Function switching/adjusting for control panels of car air conditioners
- Signal input for monitors and audio/visual equipment

■ Explanation of Part Numbers

1	2	3	4	5	6	7	8	9	10	11	12
E	V	Q	W								
Product Code			Specifications			Shaft Trims & Dimensions			Output(Pulses)		

■ Specifications

Type	Top Adjustment type, with or without bushing	
Mechanical	Rotation Angle	360 ° (Endless)
	Shaft Pull/Push Strength	80 N min.
	Shaft Wobble	0.7×L/30 (mm) max.
	Rotation Torque	20 mN·m to 100 mN·m
	Detent Pitch	10 ° to 30 °
Electrical	Output Signals	Gray code
	Resolution	Absolute 5 bit (Custom design of 6 bit max. available)
	Rating	5 mA 10 Vdc
	Contact Resistance	1 Ω max.
	Chattering	2 ms max.
	Insulation Resistance	100 MΩ min. (at 250 Vdc)
	Dielectric Withstanding Voltage	300 Vac for 1 minute
	Bouncing	5 ms max.
Endurance	Rotation Life	15000 cycles min.
Minimum Quantity / Packing Unit		80 pcs. (Tray Pack)
Quantity / Carton		800 pcs.

■ Dimensions in mm (not to scale)

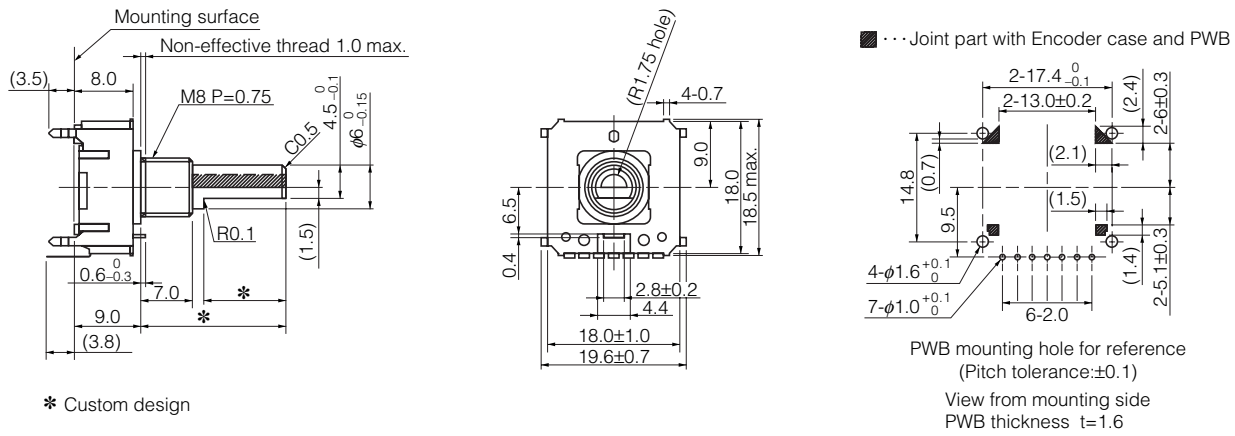

* Custom design

Design and specifications are each subject to change without notice. Ask factory for the current technical specifications before purchase and/or use.
Should a safety concern arise regarding this product, please be sure to contact us immediately.